FORESTRY MULCHERS

UMM/S - UMM/S/HP

Forestry mulchers for PTO tractors with fixed tooth rotor.

High productivity, robustness and maneuverability are the main strengths of this mulcher with a fixed rotor system. The UMM/S is a very versatile model for tractors between 180 and 350 hp. It has a mulching capacity of up 14 in diameter material. The well distributed weight allows for great maneuverability also in steep and sloppy applications. The alignment PTO system "W" connected to the central gearbox, allows for a wider working angle of the PTO shaft in all working conditions. This new model features the new counter-blade Spike PRO as standard equipment.

180-350 hp

Ø 14 in max

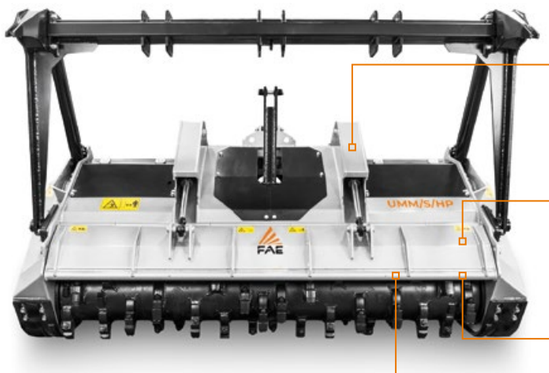

Cylinder protection
to prevent cylinder damage

Reinforced hydraulic hood
helps provide a finer product while being more durable

Spike PRO counter-blade
the distribution of the new Spike PRO counter-blades inside the shredding chamber guarantees a better finish of the mulched material

Inner anti wear clad plates FCP
absorbs wear while protecting the frame

Z style self ranging system of the PTO drive shaft/gearbox
always keeps the correct operating angle between the PTO shaft and the power take-off

Bigger transmission
for tractors with power up to 350 hp

Adjustable extended 3 point linkage
fits perfectly with any kind of tractor

MAIN OPTIONS

W style self aligning device between PTO drive shaft/gearbox
allows the mulcher to work at several angles without damaging the PTO

Mechanical/hydraulic push frame
guides and pushes material away from carrier

Additional ripper for push frame
helps with the positioning of standing material while mulching

Standard hydraulic clutch transmission
protects the transmission at PTO engagement for smooth starting and improves machine performance

STANDARD EQUIPMENT

Hydraulic rear hood	Gearbox with freewheel
Adjustable extended 3 point linkage	PTO shaft with cam clutch
Enclosed machine body	Bolted-on rotor shafts (in forged steel)
Centralized greasing hub	Hydraulic top link
Hydraulic hoses integrated in the frame	Z style self ranging system of the PTO drive shaft/gearbox
Cylinder protection	Interchangeable bolted on spike PRO counter-blade
Dual row protection chains	Adjustable skids
Transmission with belts	Supporting service leg

OPTIONS

Bolt-on chain's protection plates	Special skids to go underground
Hydraulic clutch transmission (UMM/S - UMM/S/HP 225 - 250)	Mechanical guard frame
Multiple tooth options	Hydraulic guard frame
W style self aligning device between PTO drive shaft/gearbox	Extra ripper for guard frame
IVT - CVT or creeper transmission strongly recommended	Forestry tires and carrier belly pan strongly recommended

MODEL	UMM/S 200	UMM/S 225	UMM/S 250	UMM/S/HP 200	UMM/S/HP 225	UMM/S/HP 250
Engine (hp)	180-280	190-280	200-280	180-350	190-350	200-350
PTO (rpm)	1000	1000	1000	1000	1000	1000
Working width (in)	81	91	100	81	91	100
Total width (in)	98	108	117	98	108	117
Weight including rotor type C/3 (lbs)	6482	6768	7077	6570	7297	7606
type B/3 (lbs)	7165	7408	7760	7231	7893	8532
Rotor diameter (in)	23.4	23.4	23.4	23.4	23.4	23.4
Max shredding diameter (in)	14	14	14	14	14	14
No. teeth type B/3+C/3/SS	72+2	80+2	92+2	72+2	80+2	92+2
type C/3+C/3/SS	44+2	50+2	56+2	44+2	50+2	56+2

Data refers to machine as standard set-up. Options may have reflects on weights and dimensions. The technical data in this catalogue may be altered without prior notice.

ROTOR TYPE B

TOOTH B/3
(standard)

TOOTH B/3/HD
(option)

ROTOR TYPE C

TOOTH C/3
(standard)

TOOTH C/3/HD
(option)

TOOTH K/3
(option)

TOOTH C/3/SS
(side scraper)